Section Contents


Linear Motion
1, 2, and 4 Inch Travel


Push-Pull, Linear Motion
1 and 2 Inch Travel

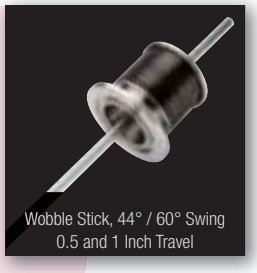
Wobble Stick, 44° / 60° Swing
0.5 and 1 Inch Travel


Rotary Motion
360° / Continuous Travel

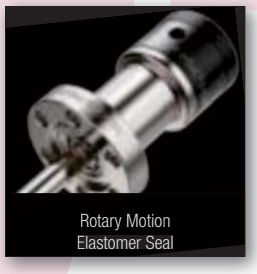
Rotary Motion
Elastomer Seal


Rotary Motion
Elastomer Seal / Extended Shaft

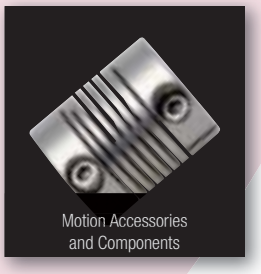
Motion Accessories
and Components

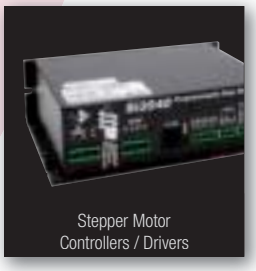
Stepper Motor
Controllers / Drivers

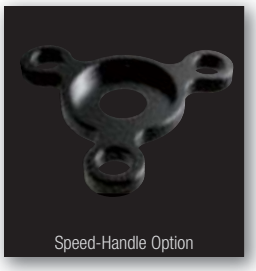
Speed-Handle Option

Product Highlights

Precision Linear Feedthroughs — Welded bellows shaft seal with 1, 2 and 4 Inch linear travel lengths.

Precision Rotary Feedthroughs — Welded bellows shaft seal with 360° plus, continuous rotational travel.

Economy Rotary Feedthroughs — Elastomer shaft seal with 360° continuous manual rotational travel.

Actuator Options — DC Stepper, AC motorized, and pneumatic actuator options available.

Linear Travel Feedthroughs

Manual / Motorized 1, 2 and 4 Inch Linear Travel Solutions

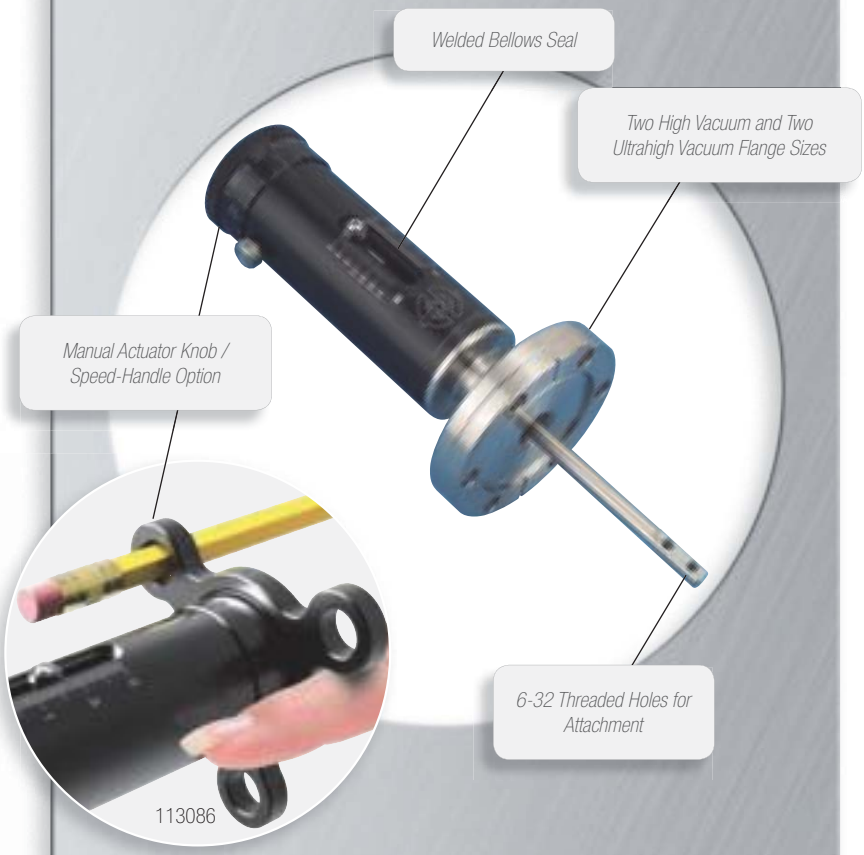

Linear Travel

Accu-Glass Products precision HTL series linear motion feedthroughs are designed to operate at temperatures as high as 250°C. Linear movement is measured in 0.001 inch increments on the rotary barrel scale and 0.025 inch increments on the linear body scale, which are laser etched into the black anodized aluminum finish.

Standard linear feedthroughs are fitted with a 1.65 diameter manual actuator, which can be fitted with an optional three-spoke Speed-Handle for faster actuation. Factory-converted motorized solutions are also available on request. Our motor options include a reversible constant speed AC motor, and two DC stepper motors, for medium and high toque applications respectively.

These precision motion instruments are constructed of aluminum and stainless steel, where only stainless steel surfaces are exposed to the vacuum environments. In-vacuum bearings are film lubricated with a UHV compatible Krytox® lubricant, while air side bearings are lubricated with high-temperature Krytox® lubricant. The linear shaft is sealed with an AM-350 edge-welded bellows.

Feedthroughs are available on Conflat® compatible, CF style metal seal or ISO-KF elastomer seal flanges.

Features

- Precision bearings guides — no bushings
- 1, 2 and 4 inch linear travel
- High temperature rated to 250°C
- UHV compatible construction
- Conflat® and ISO compatible mounts
- Edge-welded metal bellows seal
- Manual actuators
- Linear travel position lock
- Optional AC or DC motor actuators

Specifications

Material	
Body, Stainless Steel	304
Housing, Anodized Aluminum	2011
Bellows, Edge-Welded	AM-350

Vacuum Range	
UHV, Ultrahigh vacuum	$1x10^{-10}$ Torr
HV, High vacuum	$1x10^{-8}$ Torr

Temperature Range [1]	
Feedthrough	250°C
Flange, Conflat®	450°C
Flange, ISO	150°C

Load	
Axial, Maximum	5 lb
Lateral, Maximum at 2 Inch from flange face	5 lb

Resolution	
Linear Scale	0.025 Inch
Rotary Scale	0.001 Inch

Notes

1. Overall assembly ratings must be adjusted to that of its lowest rated component. For cryogenic service, the lowest recommended temperature is -80°C

§ Unless specified otherwise, dimensional units in all sections of this catalog are expressed in inches.

Linear Travel, UHV and HV Feedthroughs

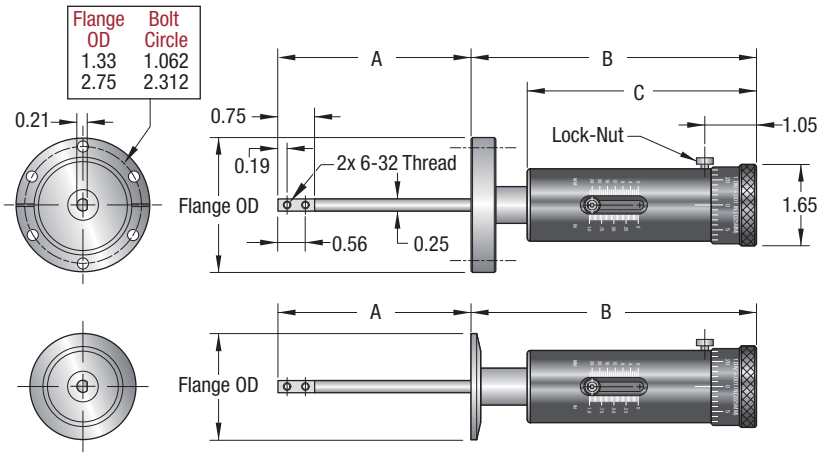

102200 / UHV 1-Inch Linear Feedthrough

102280 / HV 2-Inch Linear Feedthrough

113086 / Speed-Handle Option

Linear Feedthrough — 1, 2 and 4 Inch Linear Travel

Linear Travel	Flange Model	Flange OD	A Min.	A Max.	B	C	Model Number	Part Number
CF Flange [1] — 250°C / UHV to 1x10^{-10} Torr								
1	133 CF	1.33	3.55	4.55	5.50	4.38	HTL-133-1	**102200**
1	275 CF	2.73	3.55	4.55	5.50	4.38	HTL-275-1	**102220**
2	133 CF	1.33	3.55	5.55	6.90	5.78	HTL-133-2	**102210**
2	275 CF	2.73	3.55	5.55	6.90	5.78	HTL-275-2	**102230**
4	133 CF	1.33	3.55	7.55	9.66	8.52	HTL-133-4	**113078**
4	275 CF	2.73	3.55	7.55	9.66	8.52	HTL-275-4	**113079**
ISO KF Flange [2] — 150°C / HV to 1x10^{-8} Torr								
1	NW16 KF	1.18	3.50	4.50	5.56	4.38	HTL-K16-1	**102250**
1	NW40 KF	2.16	3.60	4.60	5.46	4.38	HTL-K40-1	**102270**
2	NW16 KF	1.18	3.50	5.50	6.96	5.78	HTL-K16-2	**102260**
2	NW40 KF	2.16	3.60	5.60	6.86	5.78	HTL-K40-2	**102280**
4	NW16 KF	1.18	3.50	7.50	9.54	8.52	HTL-K16-4	**113080**
4	NW40 KF	2.16	3.60	7.60	9.44	8.52	HTL-K40-4	**113081**

1. Compatible with Conflat® flanges and hardware 2. Compatible with ISO 2861/1 specification flanges and hardware

Actuator Options[1] — Dimensional diagram at right / See Page 176~178 for Option Specifications

Option Description	Model Number	Part Number
Motors — Detailed motor specifications on pages 176 and 177		
DC Motor, Stepper	Append to Part Number	**.11**
DC Motor, Stepper / High Torque	Append to Part Number	**.12**
AC Motor, Constant Speed / Reversible	Append to Part Number	**.21**
Speed-Handle, Anodized Aluminum	HTL-MSK	**113086**

1. When ordering motorized options, add the option number and price to the selected UHV or HV component part number and price listed above. For example, Part Number 102200.11 has a price of $1,275. Call factory for Air Actuated solutions.

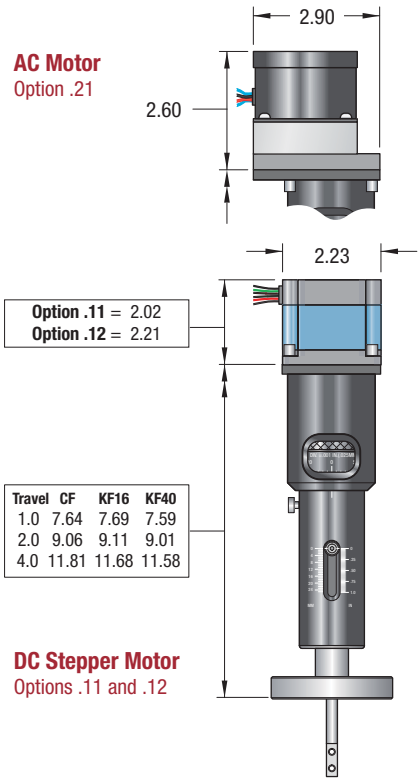

Push-Pull, Linear Travel Feedthroughs

Manual Actuator Solutions

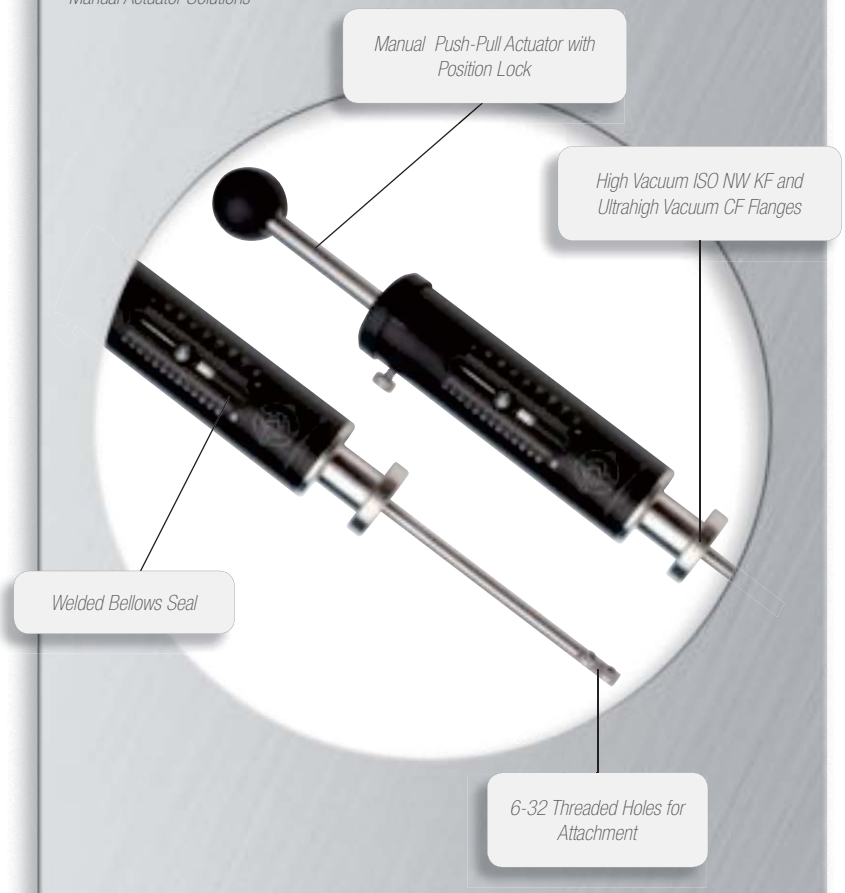

Push-Pull, Linear Travel

Accu-Glass Products' push-pull linear motion feedthroughs are designed to provide quick action linear motion. A knob is provided on the end of a stainless steel shaft to allow the operator to push the shaft in or out to the desired position. Linear movement is measured in 0.025-inch increments on the linear body scale, which is laser etched into the black anodized aluminum finish. The linear position can be locked at any point with a convenient thumb wheel located on the side of the body.

The push-pull feedthroughs are constructed of aluminum and stainless steel, where only stainless steel surfaces are exposed to the vacuum environment.

In-vacuum bearings are film lubricated with a UHV compatible Krytox® lubricant, while air side bearings are lubricated with high-temperature Krytox® lubricant. The linear shaft is sealed with an AM-350 edge-welded bellows.

Feedthroughs are available on Conflat® style CF metal seal or ISO-KF style elastomer seal flanges.

Features

- Precision bearing guides — no bushings
- 1 and 2 inch linear travel
- High temperature rated to 250°C
- UHV compatible construction
- Conflat® and ISO compatible mounts
- Edge-welded bellows seal
- Push-Pull actuator
- Linear position lock

Specifications

Material	
Body, Stainless Steel	304
Housing, Anodized Aluminum	2011
Bellows, Edge-Welded	AM-350

Vacuum Range	
UHV, Ultrahigh vacuum	$1x10^{-10}$ Torr
HV, High vacuum	$1x10^{-8}$ Torr

Temperature Range [1]	
Feedthrough [2]	250°C
Flange, Conflat®	450°C
Flange, ISO	150°C

Load	
Axial, Maximum	5 lb
Lateral, Maximum at 2 inch from flange face	5 lb

Resolution	
Linear Scale	0.025 Inch

Notes

1. Overall assembly ratings must be adjusted to that of its lowest rated component. For cryogenic service, the lowest recommended temperature is -80°C
2. Plastic knob must be removed prior to bakeout.

§ Unless specified otherwise, dimensional units in all sections of this catalog are expressed in inches.

Push-Pull, Linear Travel UHV and HV Feedthroughs

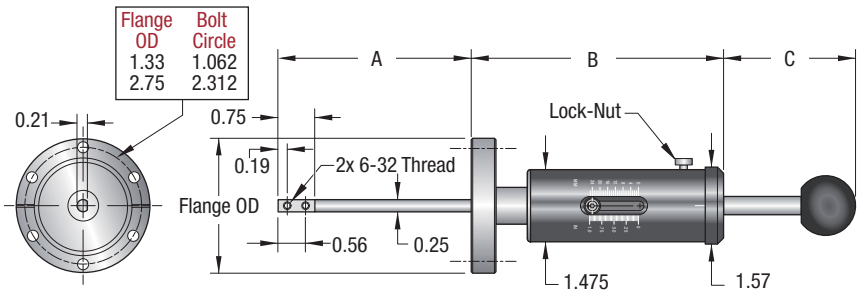

112050 / Linear Push-Pull on a 1.33" CF Flange

CF Flange[1] — Push-Pull Linear/ 250°C / UHV to 1x10^{-10} Torr

Linear Travel	Flange Model	Flange OD	A Min.	A Max.	B	C Max.	C Min.	Model Number	Part Number
Ultrahigh Vacuum									
1	133 CF	1.33	3.55	4.55	5.00	3.62	2.62	PHTL-133-1	**112050**
1	275 CF	2.73	3.55	4.55	5.00	3.62	2.62	PHTL-275-1	**112051**
2	133 CF	1.33	3.55	4.55	6.40	4.50	2.50	PHTL-133-2	**112052**
2	275 CF	2.73	3.55	4.55	6.40	4.50	2.50	PHTL-275-2	**112053**

1. Compatible with Conflat® flanges and hardware

112052 / Linear Push-Pull on a 1.33" CF Flange

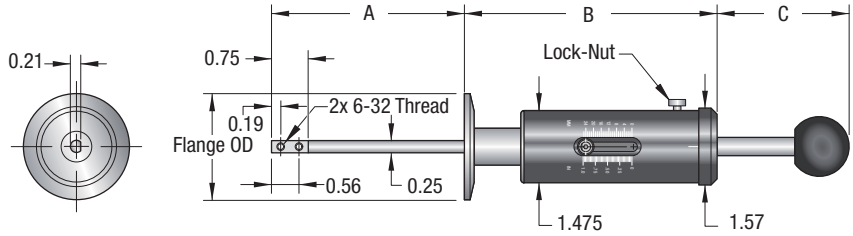

112055 / Linear Push-Pull on a NW-16 KF Flange

ISO KF Flange[1] — Push-Pull Linear / 150°C / HV to 1x10^{-8} Torr

Linear Travel	Flange Model	Flange OD	A Min.	A Max.	B	C Max.	C Min.	Model Number	Part Number
High Vacuum									
1	NW16 KF	1.18	3.50	4.50	5.06	3.62	2.62	PHTL-K16-1	**112055**
1	NW40 KF	2.16	3.60	4.60	4.96	3.62	2.62	PHTL-K40-1	**112056**
2	NW16 KF	1.18	3.50	5.50	6.46	4.50	2.50	PHTL-K16-2	**112057**
2	NW40 KF	2.16	3.60	5.60	6.36	4.50	2.50	PHTL-K40-2	**112058**

1. Compatible with ISO 2861/1 specification flanges and hardware

112056 / Linear Push-Pull on a NWK40 KF Flange

Wobble Stick, Linear - Angular Travel Feedthroughs

Manual Actuator Solutions

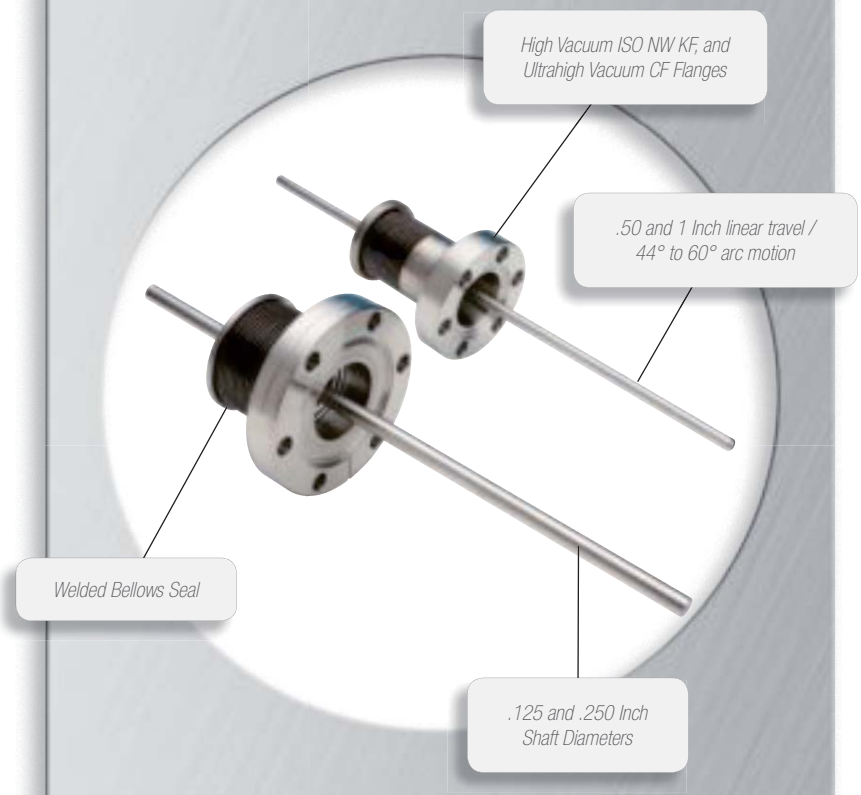

Wobble Stick, Linear-Angular Travel

Wobble stick feedthroughs offer an economical method of providing both angular and linear movement.

Position of the wobble stick must be manually held by the operator or customer provided position lock. Under vacuum load the bellows are compressed and the shaft is completely extended into the vacuum chamber, unless restrained.

The two models offered are capable of 44° (0.5-inch linear) and 60° (1-inch linear) of angular motion, respectively. However, when mounted on a typical necked port, the angular motion can be reduced to 20° and 30° respectively.

Feedthroughs are available on Conflat® style CF metal seal or ISO-KF style elastomer seal flanges.

Features

- 1/2 Inch / 44° linear-angular travel
- 1 inch / 60° linear-angular travel
- UHV compatible construction
- Leak tight to 2 x 10^{-10} Std cc/sec Helium
- Conflat® and ISO compatible mounts
- Edge-welded bellows seal

Specifications

Material	
Body, Stainless Steel	304
Bellows, Edge-Welded	AM-350

Vacuum Range	
UHV, Ultrahigh vacuum	$1x10^{-10}$ Torr
HV, High vacuum	$1x10^{-8}$ Torr

Temperature Range [1]	
Feedthrough	250°C
Flange, Conflat®	450°C
Flange, ISO	150°C

Load	
Axial, Maximum	5 lb
Lateral, Maximum at 2 inch from flange face	5 lb

Notes

1. Overall assembly ratings must be adjusted to that of its lowest rated component. For cryogenic service, the lowest recommended temperature is -80°C

§ Unless specified otherwise, dimensional units in all sections of this catalog are expressed in inches.

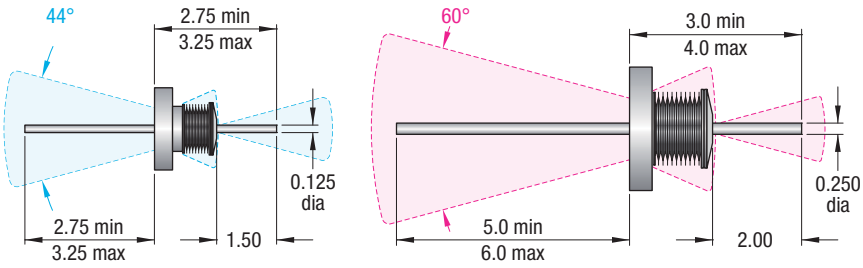

111900 / UHV Wobble Stick

CF Flange[1] — Wobble Stick, Linear-Angular / 250°C / UHV to 1x10^{-10} Torr

Linear / Angular Travel	CF Flange	Flange OD	Bellows End Cap Diameter	Model Number	**Part Number**
Ultrahigh Vacuum					
0.50 / 44°	133 CF	1.33	0.900	WS-133-050	**111900**
1.00 / 60°	275 CF	2.73	1.750	WS-275-100	**111901**

1. Compatible with Conflat® flanges and hardware

111901 / UHV Wobble Stick

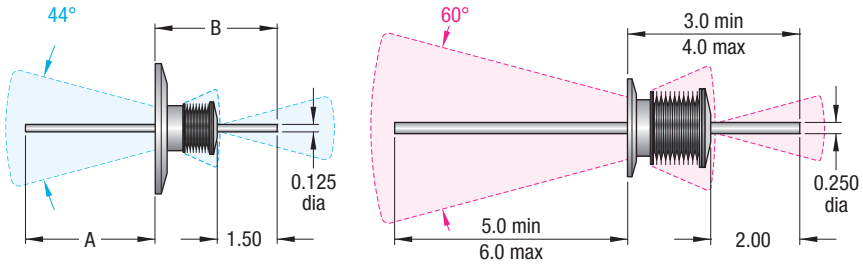

111902 / HV Wobble Stick

ISO KF Flange[1] — Wobble Stick, Linear-Angular / 150°C / UHV to 1x10^{-8} Torr

Linear / Angular Travel	ISO Flange	Flange OD	A		B		Bellows End Cap Dia.	Model Number	**Part Number**
			Min.	Max.	Max.	Min.			
High Vacuum									
0.50 / 44°	NW16 KF	1.18	2.75	3.25	2.75	3.25	0.900	WS-K16-050	**111902**
0.50 / 44°	NW40 KF	2.16	3.25	3.75	2.25	2.75	0.900	WS-K40-050	**111903**
1.00 / 60°	NW40 KF	2.16	5.00	6.00	3.00	4.00	1.750	WS-K40-100	**111904**

1. Compatible with ISO 2861/1 specification flanges and hardware

111904 / HV Wobble Stick

Rotary, Bellows Sealed Feedthroughs

Manual, Motorized, and Pneumatic Actuators

Rotary, Bellows Sealed

Accu-Glass Products high-torque HTR series rotary motion feedthroughs are designed to operate at temperatures as high as 250°C and rotational torque up to 250 in-oz.

They are constructed of black-anodized aluminum and stainless steel, where only stainless steel surfaces are exposed to the vacuum environment. In vacuum bearings are dry-film lubricated with tungsten-disulfide, while air side bearings are lubricated with high-temperature Krytox® lubricant. The rotation shaft is sealed with an AM-350 edge-welded bellows.

Standard rotary feedthroughs are fitted with a 1.65 diameter manual actuator, which can be fitted with an optional three-spoke Speed-Handle for faster actuation. Factory-converted motorized solutions are also available on request. Our motor options include a reversible constant speed AC motor, two DC stepper motors, for medium and high toque applications respectively, and a 90° pneumatic actuator.

Manual feedthrough rotation can be monitored via a 360° / 5° increment laser-etched scale found on the manual actuator knob. Rotary feedthroughs are available on Conflat® compatible CF style metal seal or ISO-KF elastomer seal flanges.

Features

- All precision bearings — no bushings
- Improved shaft coupling design for high torque, rated to 250 in-oz
- High temperature rated to 250°C
- UHV compatible construction
- Conflat® and ISO NW compatible mounts
- Welded bellows seal
- Manual actuator
- Continuous rotary motion
- Rotary position lock
- Optional stepper motor or air actuator

Specifications

Material	
Body, Stainless Steel	304
Housing, Anodized Aluminum	2011
Bellows, Edge-Welded	AM-350

Vacuum Range	
UHV, Ultrahigh vacuum	$1x10^{-10}$ Torr
HV, High vacuum	$1x10^{-8}$ Torr

Temperature Range [1]	
Feedthrough	250°C
Flange, Conflat®	450°C
Flange, ISO	150°C

Load	
Torque	250 in-oz maximum
Axial	6 lb maximum
Lateral	10 maximum

Speed [2]	
Rotary	1000 RPM

Resolution	
Rotary Scale	5°

Notes

1. Overall assembly ratings must be adjusted to that of its lowest rated component. For cryogenic service, the lowest recommended temperature is -80°C
2. Not recommended for continuous rotation, i.e. operating a fan.

§ Unless specified otherwise, dimensional units in all sections of this catalog are expressed in inches.

Rotary, Bellows Sealed UHV and HV Feedthroughs

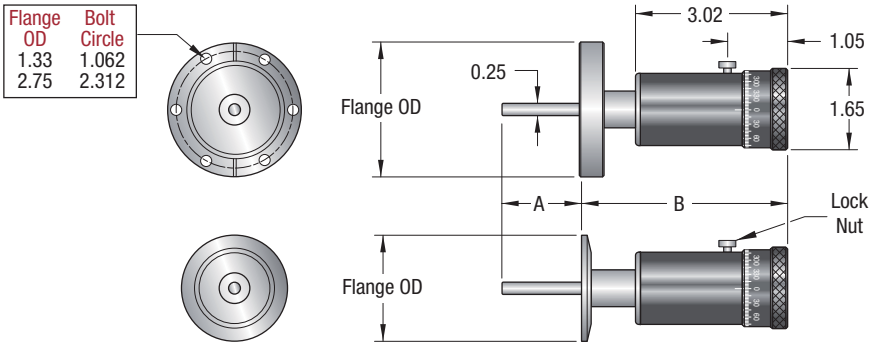

102100 / UHV Rotary Feedthrough

CF and ISO KF Flanges — Rotary Feedthroughs

Rotary Travel	Flange Model	Flange OD	A	B	Model Number	Part Number
Ultrahigh Vacuum [1] — 250°C / UHV to 1x10^{-10} Torr						
360°	133 CF	1.33	1.57	4.17	HTR-133	**102100**
360°	275 CF	2.73	1.57	4.17	HTR-275	**102110**
High Vacuum [2] — 150°C / HV to 1x10^{-8} Torr						
360°	NW16 KF	1.18	1.52	4.22	HTR-K16	**102140**
360°	NW40 KF	2.16	1.62	4.12	HTR-K40	**102150**

1. Compatible with Conflat® flanges and hardware 2. Compatible with ISO 2861/1 specification flanges and hardware

102150 / HV Rotary Feedthrough

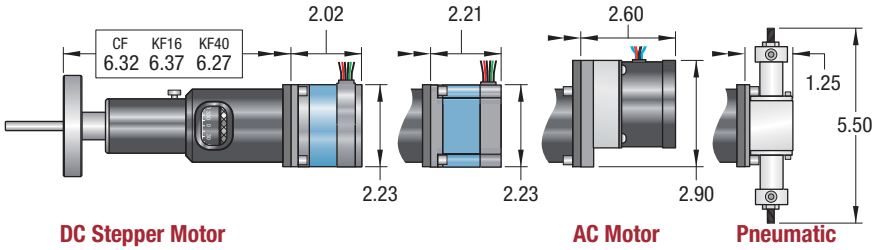

DC Stepper Motor
Options .11 / .12 High Torque

AC Motor
Option .21

Pneumatic
Option .31*

** Includes solenoid, fittings and connectors, but not speed control valve*

102110.11 / UHV Rotary Feedthrough with DC Stepper Motor option

Actuator Options — Dimensional Diagram Above / See Page 176~178 for Option Specifications

Description	Model Number	Part Number
Actuator Options — Detailed motor specifications on pages 176 and 177		
DC Motor, Stepper	append to Part Number	**0.11**
DC Motor, Stepper / High Torque	append to Part Number	**0.12**
AC Motor, Constant Speed / Reversible	append to Part Number	**0.21**
90° Pneumatic Actuator with Solenoid Valve	append to Part Number	**0.31**
Speed Control Valve, 10-32 Pneumatic Actuator	SPEED1	**112687**
Speed-Handle, Anodized Aluminum (Photo on page 168)	HTL-MSK	**113086**

When ordering motorized options, add the option number and price to the selected UHV or HV component part number and price listed above. For example, Part Number 102100.11 has a price of $1,285. Note: Accu-Glass Products recommends installation of speed control valves when using a pneumatic actuator.

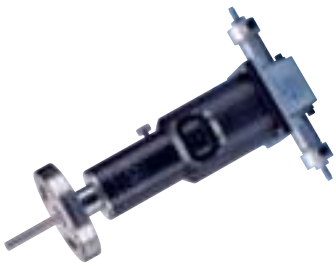

102110.31 / UHV Rotary Feedthrough with 90° Pneumatic Actuator option

112687 / Speed control valve for 90° Pneumatic Actuator

Rotary Feedthroughs

Manual Actuator Solution / Elastomer Sealed Shaft

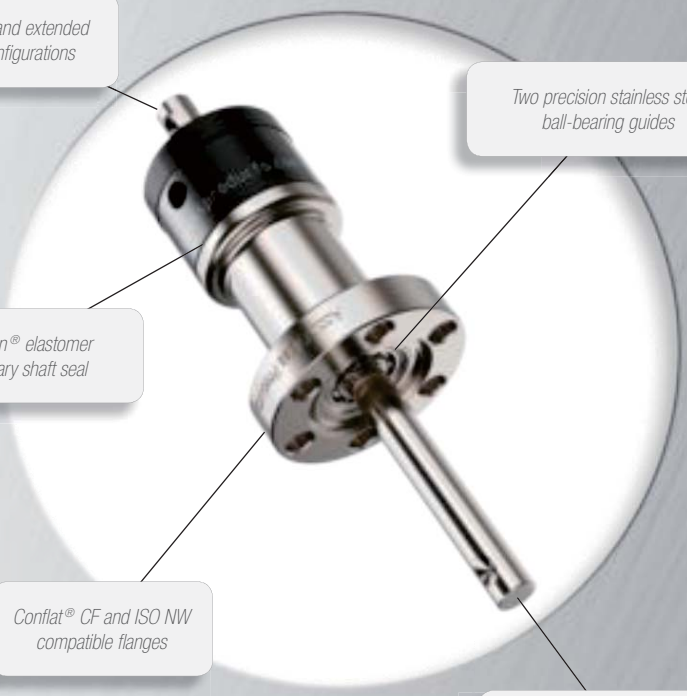

Rotary / Elastomer Sealed Shaft

The ORR series 'elastomer sealed' rotary motion feedthrough is an economical alternative to our bellows sealed devices. They are ideally suited for less critical applications in the high vacuum regime.

They are constructed of black-anodized aluminum and stainless steel. In vacuum bearings are dry-film lubricated with tungsten-disulfide, while air side bearings are lubricated with high-temperature Krytox® lubricant. The rotation shaft is sealed with a Viton® elastomer O-ring located at end opposite vacuum mounting flange.

Standard rotary feedthroughs are fitted with a manual actuator, and are also available with an air-side shaft extension for added drive flexibility.

These rotary feedthroughs are available on Conflat® compatible CF style metal seal or ISO-KF elastomer seal flanges.

Features

- Economical alternative to bellows seal
- 360° angular rotation
- HV compatible construction
- Leak tight to 2 x 10^{-10} Std cc/sec Helium
- Conflat® and ISO compatible mounts
- Viton® elastomer shaft seal
- Custom solutions on request

Specifications

Material	
Body, flange, and shaft... Stainless Steel	304
Actuator Knob, Aluminum	2011
Elastomer shaft seal	Viton®

Vacuum Range	
HV, High vacuum	$1x10^{-8}$ Torr

Temperature Range [1]	
Feedthrough	150°C
Flange, Conflat®	450°C
Flange, ISO	150°C

Load	
Axial	5 lb maximum
Lateral	5 lb at 2 inch extension maximum

Notes

1. Overall assembly ratings must be adjusted to that of its lowest rated component. For cryogenic service, the lowest recommended temperature is -80°C

§ Unless specified otherwise, dimensional units in all sections of this catalog are expressed in inches.

Rotary, Elastomer Sealed Shaft HV Feedthroughs

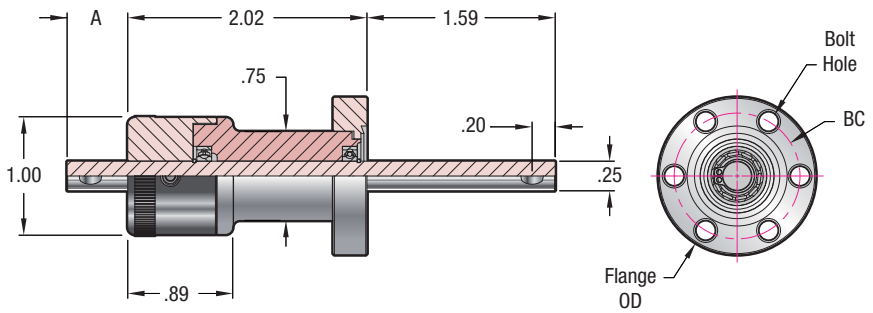

113200 / Standard 1/4 Inch Shaft on 1.33 CF Flange

CF Flange[1] — Elastomer Sealed Shaft / 150°C / HV to 1x10^{-8} Torr

Angular Rotation	CF Flange	Flange OD	BC	Bolt Hole	A	Model Number	Part Number
Standard Shaft — 1/4 Inch Diameter							
360	133 CF	1.33	1.062	.172	—	ORR-1/4-133	**113200**
360	275 CF	2.73	2.312	.265	—	ORR-1/4-275	**113205**
Extended Shaft — 1/4 Inch Diameter							
360	133 CF	1.33	1.062	.172	.51	ORR-1/4-133-ES	**113201**
360	275 CF	2.73	2.312	.265	.51	ORR-1/4-275-ES	**113206**
Service Kit[2] / Replacement parts...						ORR-1/4-SK	**113220**

1. Compatible with Conflat® flanges and hardware 2. Includes snap rings, bearings, O-ring and fits all parts above.

113201 / Extended 1/4 Inch Shaft on 1.33 CF Flange

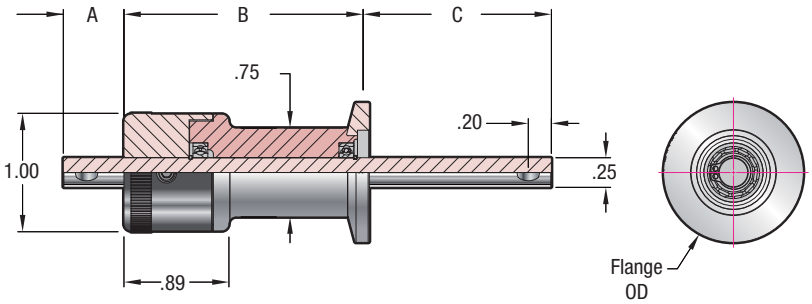

113210 / Standard 1/4 Inch Shaft on ISO NW16 KF Flange

ISO KF Flange[1] — Elastomer Sealed Shaft / 150°C / HV to 1x10^{-8} Torr

Angular Rotation	KF Flange	Flange OD	A	B	C	Model Number	Part Number
Standard Shaft — 1/4 Inch Diameter							
360	NW16 KF	1.18	—	2.07	1.54	ORR-1/4-K16	**113210**
360	NW40 KF	2.16	—	1.97	1.64	ORR-1/4-K40	**113215**
Extended Shaft — 1/4 Inch Diameter							
360	NW16 KF	1.18	0.51	2.07	1.54	ORR-1/4-K16-ES	**113211**
360	NW40 KF	2.16	0.51	1.97	1.64	ORR-1/4-K40-ES	**113216**
Service Kit[2] / Replacement parts...						ORR-1/4-SK	**113220**

1. Compatible with ISO 2861/1 specification flanges and hardware 2. Includes snap rings, bearings, O-ring and fits all parts above.

113211 / Extended 1/4 Inch Shaft on ISO NW16 KF Flange

Linear / Rotary Accessories

1/8 and 1/4 Inch Shaft Components

Linear / Rotary Accessories

Accu-Glass Products' motion feedthrough accessories are an assortment of in-vacuum hardware components to assist the user when installing motion feedthroughs. Various types of drive shaft components are provided, including bellows couplings, universal joints, extension couplings, bearings, bearing mounts, ground shaft stock and collars.

Vented mounting screws for the bearing mounts can be found on pages 217–220.

If you require custom designed hardware, please contact our technical sales staff with your inquiries.

Features

- UHV and HV compatible construction

Specifications

Material

Shafts, Stainless Steel	304
Mounts, Aluminum	6061

Vacuum Range

UHV, Ultrahigh vacuum	$1x10^{-10}$ Torr
HV, High vacuum	$1x10^{-8}$ Torr

Temperature Range [1]

Up to	250°C

Notes

1. Overall assembly ratings must be adjusted to that of its lowest rated component. For cryogenic service, the lowest recommended temperature is -80°C

§ Unless specified otherwise, dimensional units in all sections of this catalog are expressed in inches.

Bearing Mounts

Radial Bearing Mounts are made from UHV compatible aluminum and designed for use with 0.250" O.D. precision ground shafts found below.

Linear Bearing Mounts are made from UHV compatible aluminum and designed for use with 0.250" O.D. precision ground shafts found below.

Both radial and linear bearing mounts are supplied with two retaining rings to secure bearings in place.

Bearing Mounts — 250°C / UHV to $1x10^{-10}$ Torr

Installation	Compatible Bearing (Sold Separately)	Qty.	Model Number	Part Number
Radial Bearing Mount				
Top Mount	112004	1	RBM-T-250	**112002**
Linear Bearing Mount				
Top Mount	112005	1	LBM-T-250	**112003**

112002 / Radial Bearing Mount

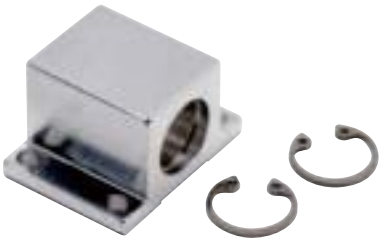

112003 / Linear Bearing Mount

Bearings

Radial Bearing has a 0.250" I.D. to support precision ground shafts found below. They are stainless steel construction and are dry lubricated with Dicronite® which is suitable for UHV environments. Ideally suited for radial bearing mounts listed above.

Linear Bearing has a 0.250" I.D. to support precision ground shafts found below. They are stainless steel construction and are dry lubricated with Dicronite® which is suitable for UHV environments. Ideally suited for linear bearing mounts listed above.

Bearings — 250°C / UHV to $1x10^{-10}$ Torr

Bearing Type	Compatible Bearing Mount (Sold Separately)	Qty.	Model Number	Part Number
UHV Bearings				
Rotary	112002	1	R-BB-250	**112004**
Linear	112003	1	L-BB-250	**112005**

112004 / Rotary Bearing

112005 / Linear Bearing

Precision Ground Shaft Stock

Precision Ground Shaft Stock is ideally suited for use with 0.250" I.D. bearings listed above. These shafts along with our range of couplers on the next page can be used to extend the motion of our rotary and linear feedthroughs found on pages 162 through 169.

Ground Shaft Stock — 250°C / UHV to $1x10^{-10}$ Torr

Length (inches)	Ground OD	Material	Qty.	Model Number	Part Number
Precision Ground Shaft Stock					
6	0.250	Stainless Steel	1	PGSS-250S-6	**112006**
12	0.250	Stainless Steel	1	PGSS-250S-12	**112007**
24	0.250	Stainless Steel	1	PGSS-250S-24	**112008**

112006 / Ground Shaft Stock

112009 / Flex Coupling

112010 / Bellows Coupling

112011 / Sleeve Coupling

112012 / Set Screw Collar

112013 / Universal Joint
112014 / Miter and Bevel Gear

Couplers and Collars

Couplers are made from 300 series stainless steel and are ideally suited for UHV applications. Bellows couplings provide 50 oz-in maximum torque at a maximum tilt angle of 5°. Couplings are fitted with two or four 6-32 UNC set screws to lock shafts in position.

Collars are made from 300 series stainless steel and are supplied with one 6-32 UNC set screw to lock shaft in position to create a shaft stop.

Couplers and Collars — 250°C / UHV to $1x10^{-10}$ Torr

Component	ID	OD	Qty.	Model Number	Part Number
Couplers					
Flex Coupling	0.250	0.750	1	FLEXC-250	**112009**
Bellows Coupling	0.250	0.550	1	BELC-250	**112010**
Sleeve Coupling	0.250	0.500	1	SLVC-250	**112011**
Collar					
Set Screw Collar	0.250	0.500	1	SET-COLL-250	**112012**

Universal Joint / Miter+Bevel Gear

Universal Joints are made from 300 series stainless steel and 6-32 UNC set screws to lock shafts in position. These provide rotary motion input at angles of up to 30° at low speed and 10° at higher speeds while providing variable angle rotary output.

Miter and Bevel Gears provide rotary input and 90° rotary output. These are constructed using 300 series stainless steel bodies as well as 6-32 UNC set screws to lock shafts in position.

Universal Joint / Miter+Bevel Gear — 250°C / UHV to $1x10^{-10}$ Torr

Component	ID	OD	Qty.	Model Number	Part Number
Universal Joint / Miter+Bevel Gear					
Universal Joint	0.250	0.500	1	UNV-JT-250	**112013**
Miter+Bevel Gear	0.250	0.650	1	MB-GR-250	**112014**

Precision Ground Shaft Stock

Precision Ground Shaft Stock is ideally suited for use with the 0.125 range of wobble sticks. These shafts can be used to extend the motion and range of our 0.125-inch shaft wobble sticks found on page 167.

112532 / Stainless Steel Rod

Ground Shaft Stock — 250°C / UHV to 1x10^{-10} Torr

Length (inches)	Ground OD	Material	Qty.	Model Number	Part Number
Precision Ground Shaft Stock					
6	0.125	Stainless Steel	1	PGSS-125S-6	**112532**

Couplers and Collars

Couplers are made from 300 series stainless steel and are ideally suited for UHV applications. Bellows couplings provide 50 oz-in maximum torque at a maximum tilt angle of 5°. Couplings are fitted with two 6-32 UNC set screws to lock shafts in position.

Collars are made from 300 series stainless steel and are supplied with one 6-32 UNC set screw to lock shaft in position to create a shaft stop.

112533 / Bellows Coupling

Couplers and Collars — 250°C / UHV to 1x10^{-10} Torr

Component	ID	OD	Qty.	Model Number	Part Number
Couplers					
Bellows Coupling	0.125	0.550	1	BELC-125	**112533**
Sleeve Coupling	0.125	0.310	1	SLVC-125	**112534**
Collar					
Set Screw Collar	0.125	0.310	1	SET-COLL-125	**112535**

112534 / Sleeve Coupling

112535 / Set Screw Collar

Universal Joint / Miter+Bevel Gear

Universal Joints are made from 300 series stainless steel and 2-56 UNC set screws to lock shafts in position. These provide rotary motion input at angles of up to 30° at low speed and 10° at higher speeds while providing variable angle rotary output.

Miter and Bevel Gears provide rotary input and 90° rotary output. These are constructed using 300 series stainless steel bodies as well as 2-56 UNC set screws to lock shafts in position.

Universal Joint / Miter+Bevel Gear — 250°C / UHV to 1x10^{-10} Torr

Component	ID	OD	Qty.	Model Number	Part Number
Universal Joint / Miter+Bevel Gear					
Universal Joint	0.125	0.500	1	UNV-JT-125	**112536**
Miter+Bevel Gear	0.125	0.385	1	MB-GR-125	**112537**

112536 / Universal Joint
112537 / Miter and Bevel Gear

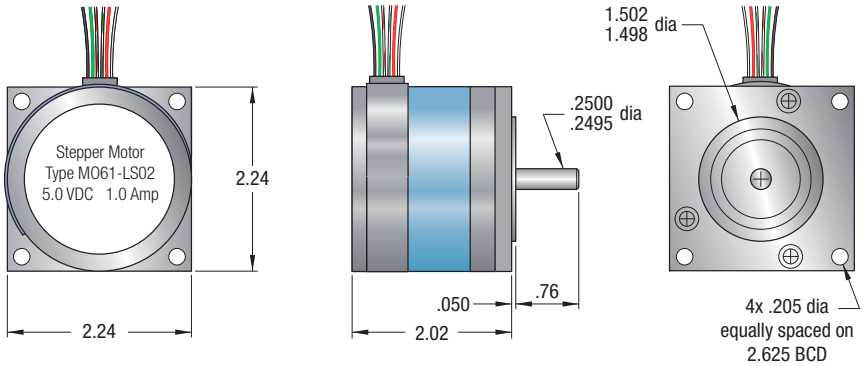

Option .11 — Features

- NEMA standard 23D frame size
- ± 3% noncumulative step accuracy
- 48-50 tooth pitch
- 6 wire leads
- Contact factory for use in unipolar configuration

DC Stepper Motor — Specifications / In Series Bipolar Wiring / 65°C / Air Service

Connection Type	Leads	Torque, Holding (two phases on)	75 in-oz
Number of Leads	6	Torque, Residual	1 in-oz
Voltage, Input	5 VDC	Inertia, Rotor	0.04 lb-in^2
Current, Input	0.7 A	Load, Overhang	15 lb
Temperature	-40 to 65°C	Load, Thrust	25 lb
Steps per Revolution	200	Weight	1.5 lb

Feedthroughs page 163 and 169, Motor drive and controller, page 178.

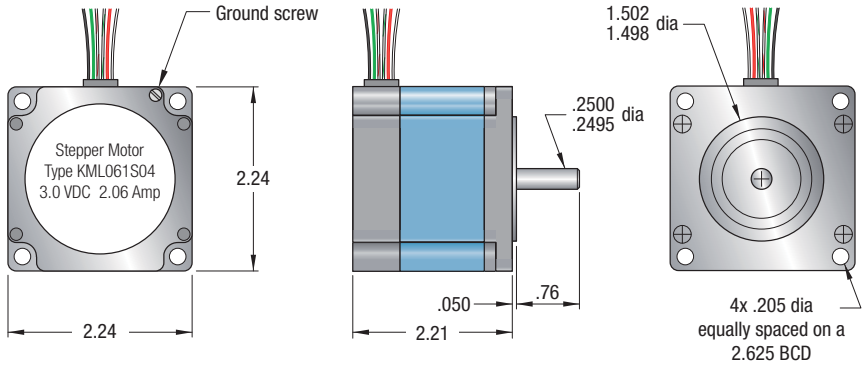

Option .12 — Features

- NEMA standard 23D frame size
- ± 2% noncumulative step accuracy
- 1.8° Full step increments (0.9° half step)
- Microstepped to 0.0072°
- Up to 20,000 steps/second (6,000 RPM)

High Torque DC Stepper Motor — Specifications / In Series Bipolar Wiring / 65°C / Air Service

Connection Type	Leads	Torque, Holding (two phases on)	170 in-oz
Number of Leads	6	Torque, Residual	1 in-oz
Voltage, Input	3 VDC	Inertia, Rotor	0.0034 oz-in^2
Current, Input	2 A	Load, Overhang	15 lb
Temperature	-40 to 65°C	Load, Thrust	25 lb
Steps per Revolution	200	Weight	1.6 lb

Feedthroughs page 163 and 169, Motor drive and controller, page 178.

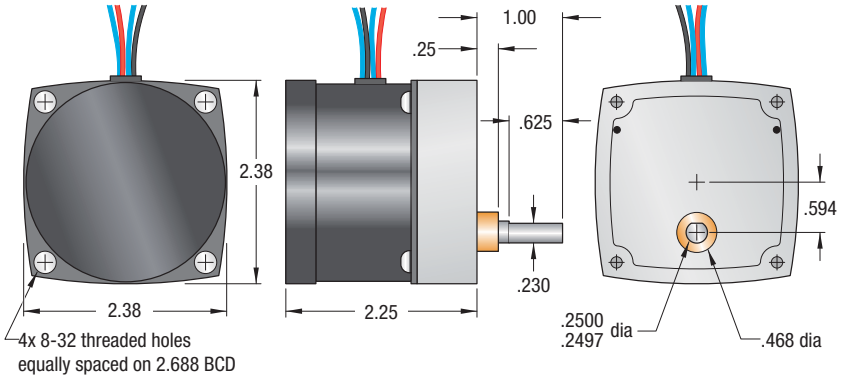

Reversible AC Motor — Specifications / 65°C / Air Service

Connection Type	Leads
Number of Leads	4
↻ Clockwise	Blue + Red
↺ Counter-Clockwise	Blue + Black
Voltage, Input	115 VAC / 60 Hz
Power	7.5 W

Temperature	-40 to 65°C
Torque	126 in-oz
Speed, Output Shaft	10 RPM
Weight	3 lb

Feedthroughs page 163 and 169

Option .21 — Features

- 10 RPM continuous motion
- 4 Wire leads plus capacitor
- Leads may be wired for switched direction reversing :
  ↻ Clockwise, blue + red
  ↺ Counter Clockwise, blue + black
- Economical actuator solution

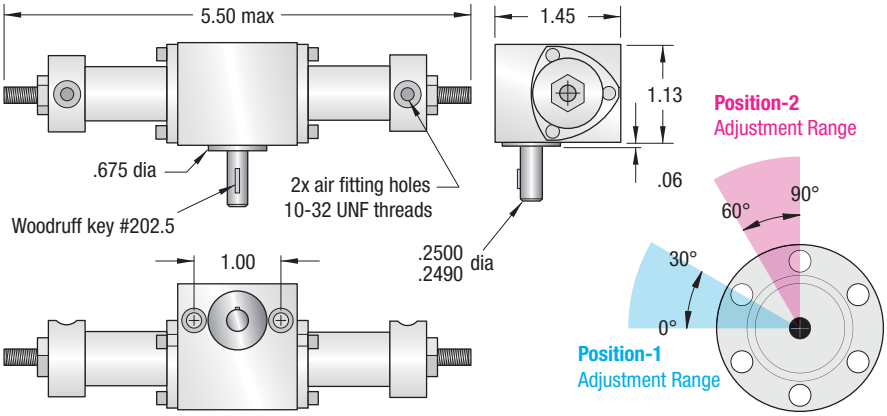

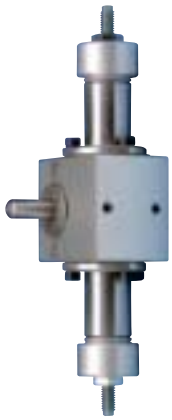

90° Pneumatic Actuator — Specifications / 65°C / Air Service

Connections, Air Fitting	10-32 UNF
Pressure, Maximum Air	150 PSI
Torque Capacity	.068 in-lb / PSI
Temperature	-29 to 93°C
Rotation Angle, Maximum	90°
Stop Adjustment (both ends)	30°

Weight	0.5 lb
Solenoid, 4-Way Electrical	115 VAC
Tube, 1/8 Inch Nylon	8 ft
Fitting, 1/8 Inch Tube / 10-32 UNF	5 pc
Fitting, 1/8 Inch FPT Tube	1 pc

Accu-Glass Products recommends installation of speed control valves when using a pneumatic actuator, page 169.

Option .31 — Features

- 150 PSI Pneumatic Actuator
- 90° Maximum Rotation
- 30° Rotation Stop Adjustments
- Drive two-position devices like in-vacuum shutters
- Electrical solenoid, air fittings and lines included

110910 / Stepper Motor Drive

110911 / Stepper Motor Controller

Motor Drive and Controller

The Motor Drive Controller is suitable for use with both of our DC stepper motor options listed on pages 176 and 177. See page 163 and 169 for compatible stepper-motor fitted feedthroughs. Manufactured by Applied Motion Products, Inc., the Si3540 features include:

- Powerful, precise and efficient MOSFET driver providing up to 3.5 amps per phase and microstepping to 50,800 steps per revolution.
- Reliable, efficient, low noise 40 VDC linear, toroidal power supply.
- Powerful, flexible, easy to use indexer.
- Connects by a simple cable to your PC for programming (cable included).
- Microsoft Windows™-based software for easy setup and programming.
- Eight inputs for interacting with the user and other equipment.
- Three outputs for coordinating external equipment.
- Accepts 110 or 220 volt AC power (factory preset for 110 volts).
- External trigger I/O is optically isolated, 5-24V, sinking or sourcing signals. PC/MMI port is RS-232.
- Sturdy 2.25 x 7.8 x 5 inch metal chassis.
- Pluggable screw terminal connectors for motor, AC power and I/O signals.
- Optional man machine interface (MMI) allows operator to enter distances, speeds, cycle counts and more.
- CE and TUV Compliant.

Stepper Motor Controller — Motor Drive and Controller / Ambient Temperature / Atmosphere.

Bearing Type	Compatible Bearing Mount (Sold Separately)	Qty.	Model Number	**Part Number**	Unit Price $
Motor Drive	Motor drive	1	MCC-3540	**110910**	1275
Motor Controller	with keypad for motor drive	1	MCC-MMI-01	**110911**	725

Stepper Motor Step Accuracy

Accu-Glass uses Slo-Syn® DC stepper motors on rotary and linear actuators. The stepping action occurs when the power to the motor's winding is switched in a specific sequence by the motor controller. The motors are brushless, permanent magnetic motors that have full-step increments of 1.8° (200 steps per revolution). For increased accuracy, controllers are available that provide a half-step mode 0.9° (400 steps per revolution) and microstepping mode 0.014° (25714 steps per revolution) maximum. For specific information regarding half-step and microstep mode, refer to the manufacturer of the controller. When power is removed from a stepper operating in a half- or microstep mode the shaft will move to the closest full step position.

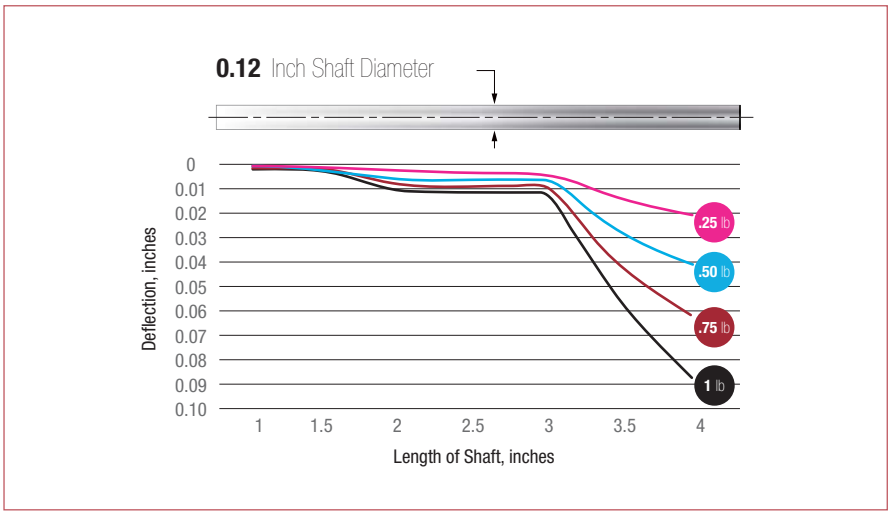

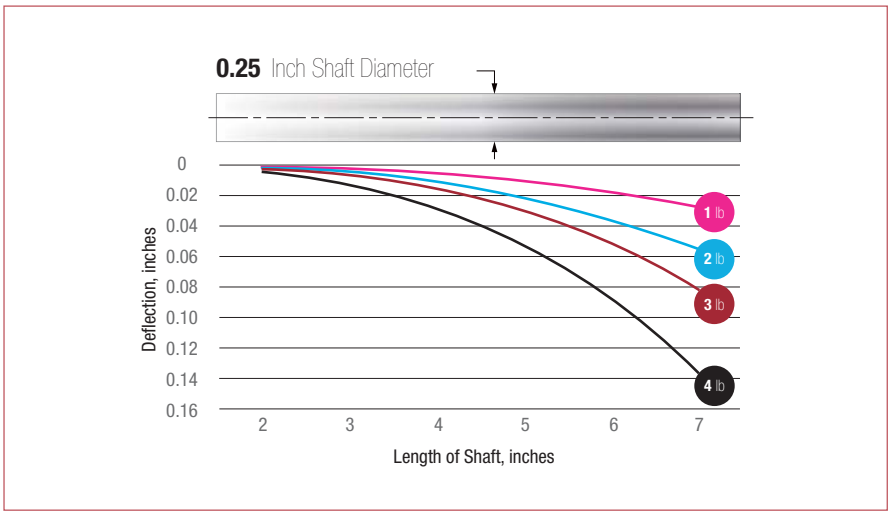

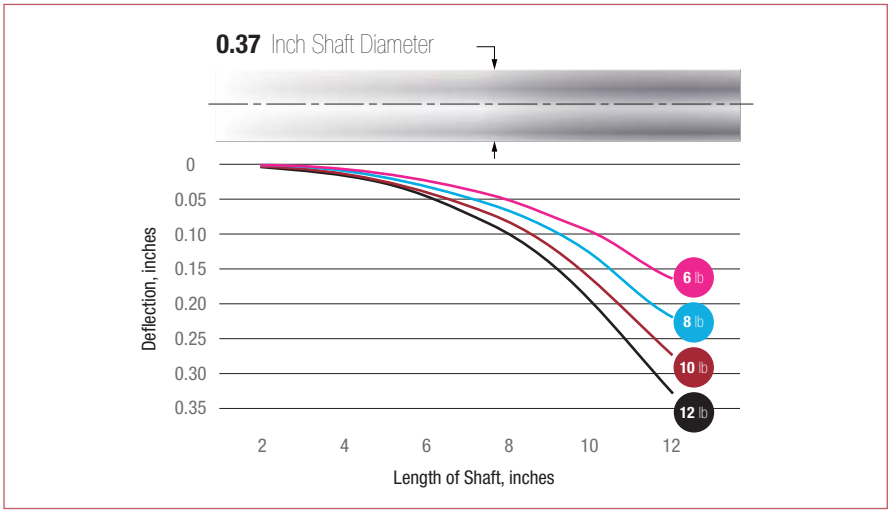

Shaft Deflection Graphs

The graphs show the actual measured deflection for 0.125", 0.250" and 0.375" ground 304 stainless steel rods when a load is applied perpendicular to a shaft's axis of motion. Rods were mounted horizontally with one end fixed and supported while opposite ends were left free and unsupported. The actual deflection caused by a lateral or moment load applied of various weight and distance from the supported end was plotted. These graphs are for reference only and may vary from actual measurements. They should be used as visual aids to understand the effects of lateral loading on true position.